ELEN 115
Dylan Thornburg and Lauren HU
4/4/2024

Laboratory #1: Circuit Analysis using LTSpice

I. Objectives

In our own words, this lab is meant to familiarize ourselves with the hardware we'll be using and LTspice. To do this we will construct voltage and current divider circuits and analyze them in both simulations and real life.

II. Pre-lab: No prelab due.

III. Laboratory Procedure:

Review the Manual for LTSpice posted on Camino while you do this lab.

Part 1: Schematic Capture

For this section of the lab, please create the voltage divider circuit shown in Figure 1 in LTSpice. The voltage divider is the electrical engineering equivalent of the computer engineering "hello world!" function. Its simplicity makes it a great reference point for starting out with a circuit simulator as it allows us to validate our implementation of the circuit.

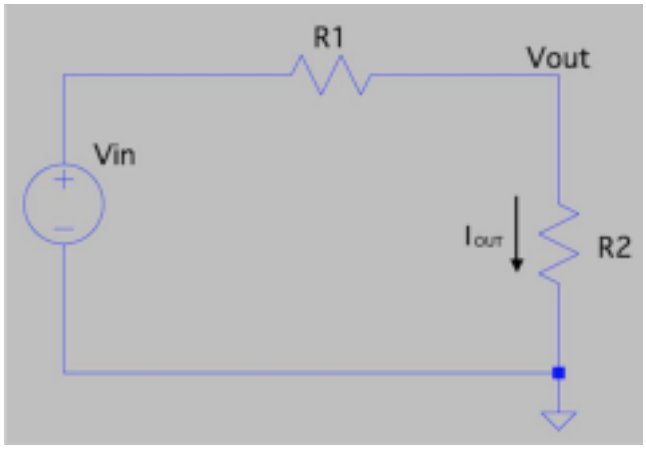

Figure 1. Voltage divider

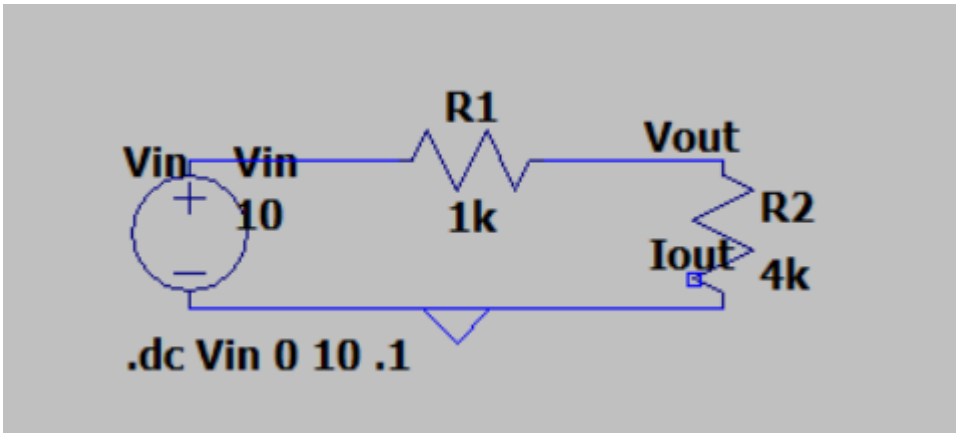

Part 2: DC Analysis

(1) Assign component value for R1 = 1kΩ and R2 = 4kΩ.

(2) Run a DC Sweep simulation on Vin from 0V to 10V in 100mV increments. (3) Plot V_{IN} on the x axis and V_{OUT} on the y axis.

What is the slope of this curve? What does it represent?

Do the results look as expected? Why or why not?

Make sure to take a screen capture of the simulation waveforms.

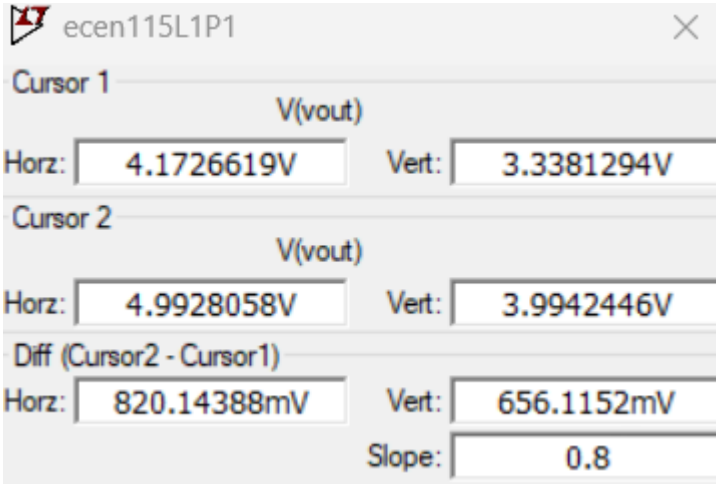

.8=⅘

The slope is ⅘ which is expected. It is expected because it represents the voltage division of the voltage over the 1k and 4k resistor in series. For example, at 10 V we get an output of 8V and the voltage division at R2 = 10*(4k/(1k+4k))=8

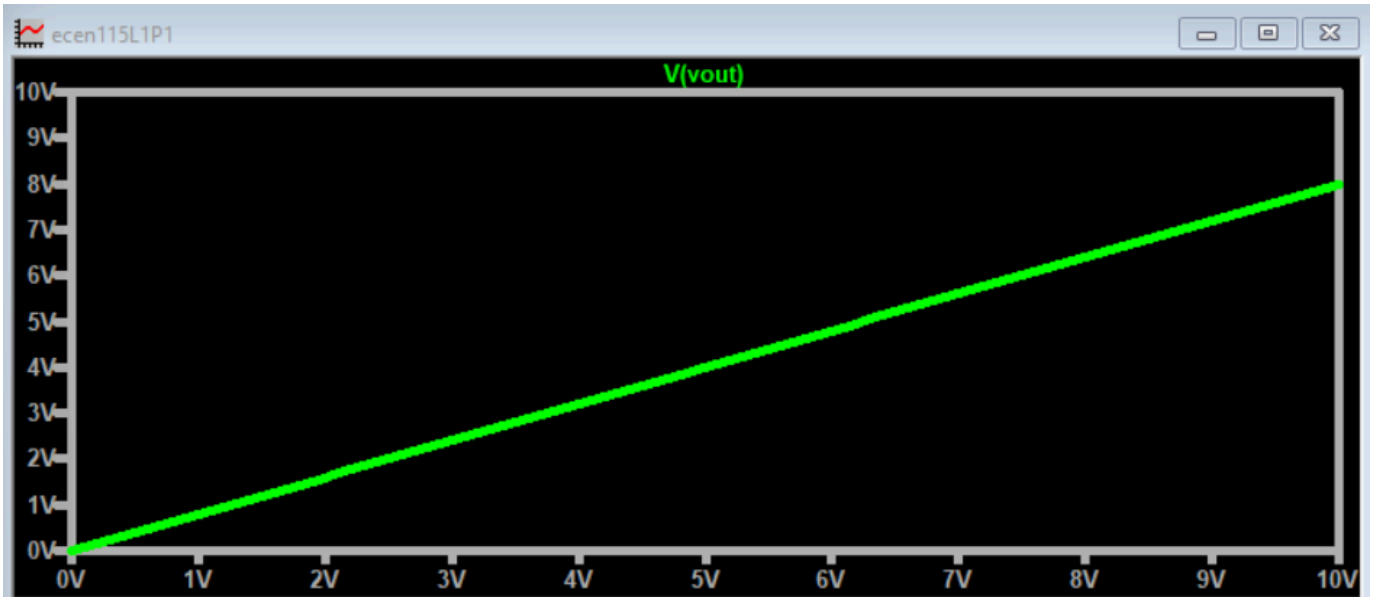

(4) Modify the value of R2 = 3kΩ. Rerun the DC sweep and replot the signals. How did the slope change? Explain why?
Make sure to take a screen capture of the simulation waveforms.

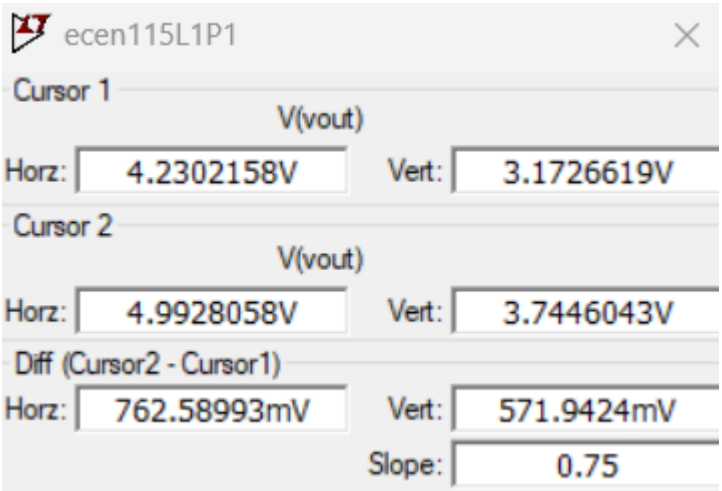

The slope went down to 3/4. This happened because the voltage at R2 went down as a result of the decrease resistance. If we do the voltage division equation, we see 10*(3k/(1k+3k))=7.5V as shown in the graph.

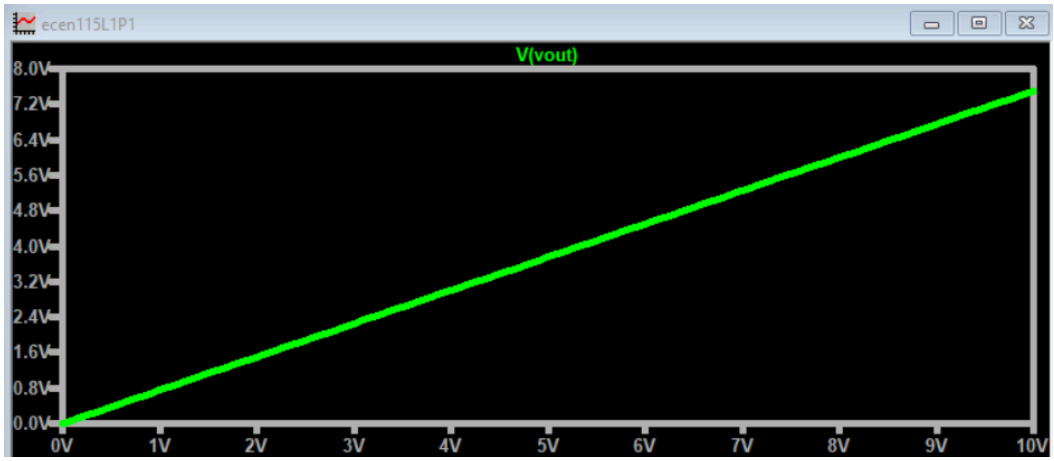

(5) Let us now measure the current I_{OUT} by placing a current measurement tool. Plot voltage V_{OUT} (on y axis) vs. the current I_{OUT} (on x-axis).
What does the plot show?

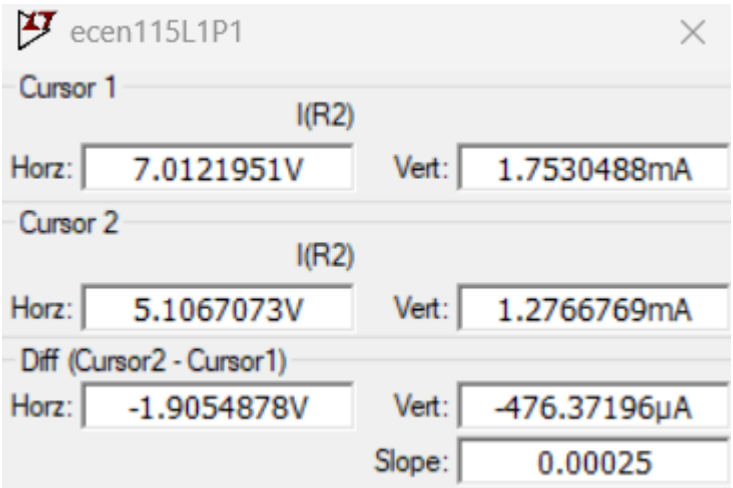

The plot shows the same slope for both lines. The slope also represents 1/(the total resistor value). 1/4000 = .00025

Make sure to take a screen capture of the simulation waveforms.

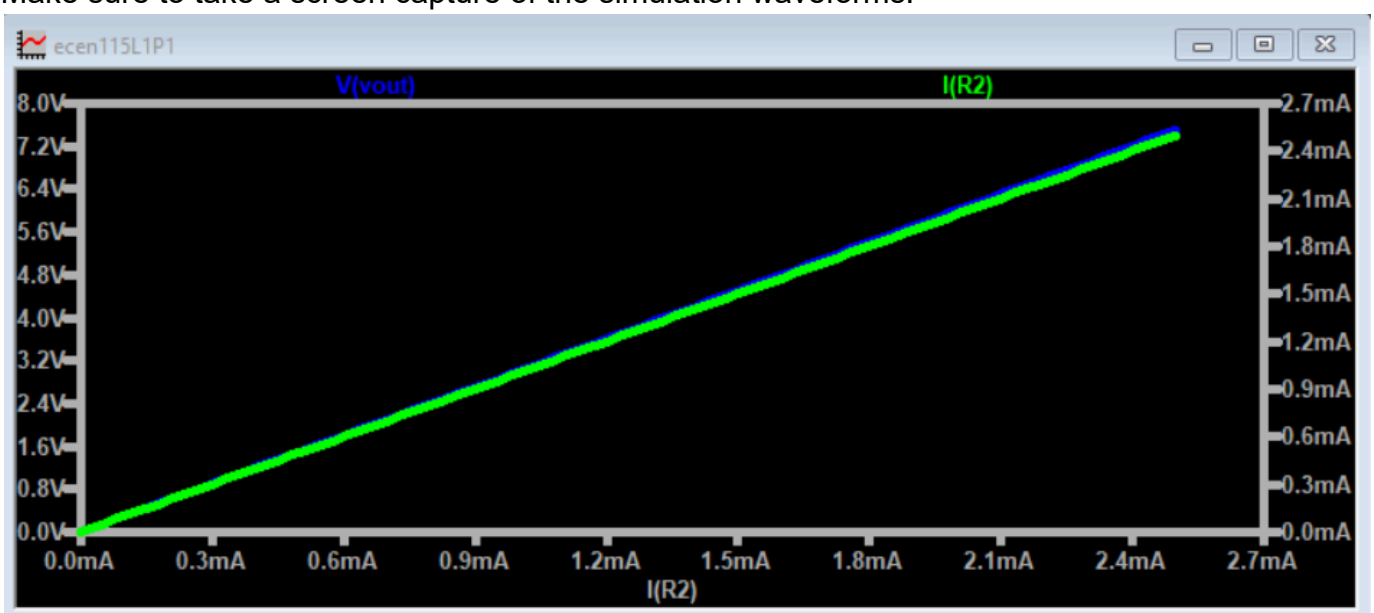

TA Check Point: Complete Part 1 and Part 2 and demo the results to your TA.

<u>Part 3: Transient Analysis</u>

(1) Assign component value for R1 = 1kΩ and R2 = 4kΩ.
(2) Make the voltage source V_{IN} a sinusoidal source with 1V amplitude and 1 kHz frequency. (3) Run a Transient Analysis for 5ms, using 10us time steps.
(4) Plot V_{IN} and V_{OUT} as a function of time.
Do the results look as expected? Why or why not?
Yes they look as expected. The amplitude of Vout is always ⅘ of Vin as proven

through voltage division.

Make sure to take a screen capture of the simulation waveforms.

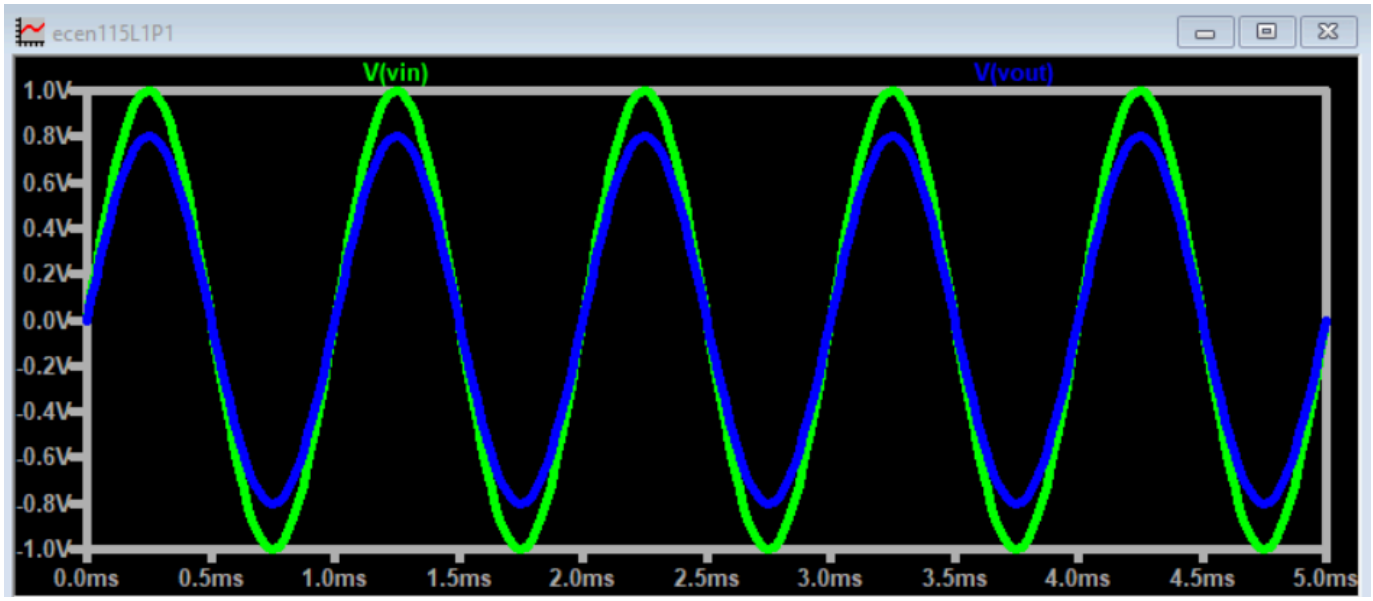

(5) Plot current I_{OUT} as a function of time.

What does the plot show?

The plot shows the current over time. It changes proportionately to the voltage as expected. I(R2) = Iout

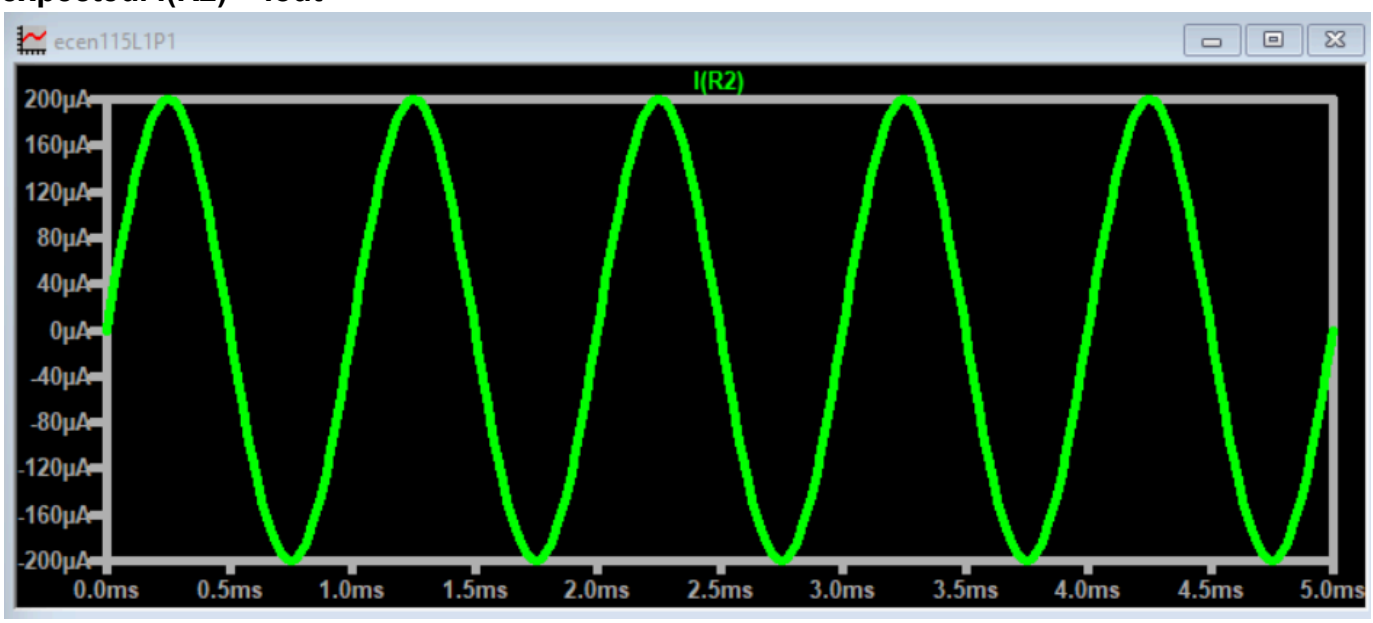

Make sure to take a screen capture of the simulation waveforms.

(6) Plot the power delivered by V_{IN} and power delivered to R2 as a function of time. Explain the relationship between the two power plots.

Make sure to take a screen capture of the simulation waveforms.

The power absorbed by R2 is ⅘ of the power produced by Vin. Because the current is the same throughout, the ⅘ of the total voltage at R2 is the only thing that makes a difference.

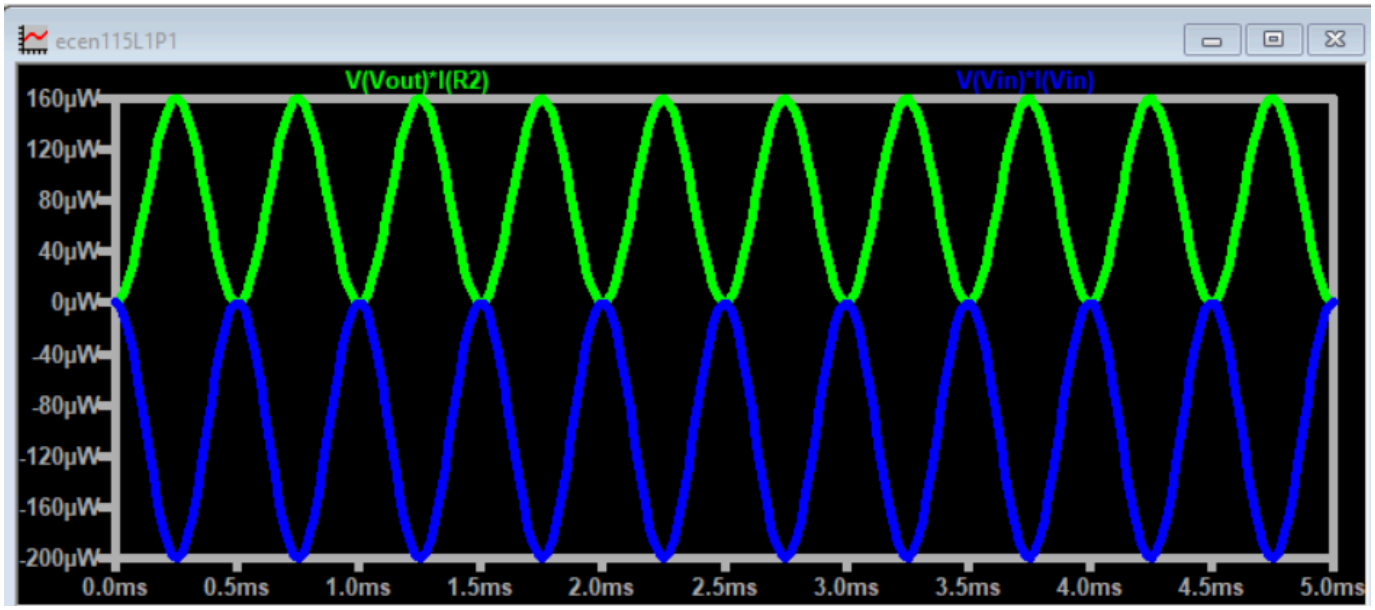

(7) Modify the value of R2 = 3kΩ. Rerun the transient simulations and replot the signals. How did the waveforms change? Explain why?

The amplitude of both increased and the ratio between the amplitudes changed. It went from ⅘ * Power produced = power absorbed to ¾ * Power produced = power absorbed. This is all because we changed the resistor value. Less resistance equals higher current, and a smaller R2 results in less voltage over R2.

Make sure to take a screen capture of the simulation waveforms.

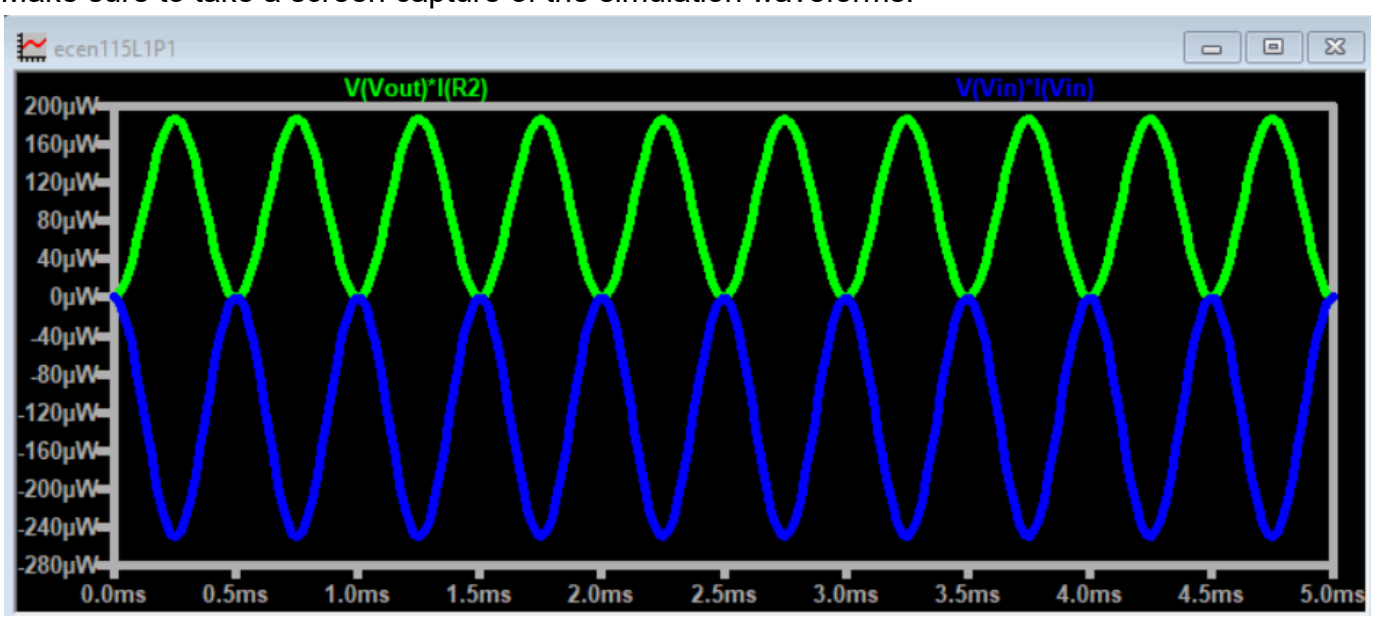

TA Check Point: Complete Part 3 and demo the results to your TA.

Part 4: Parallel Circuit

Figure 2. Current divider

(1) Draw the current divider schematic in Figure 2.

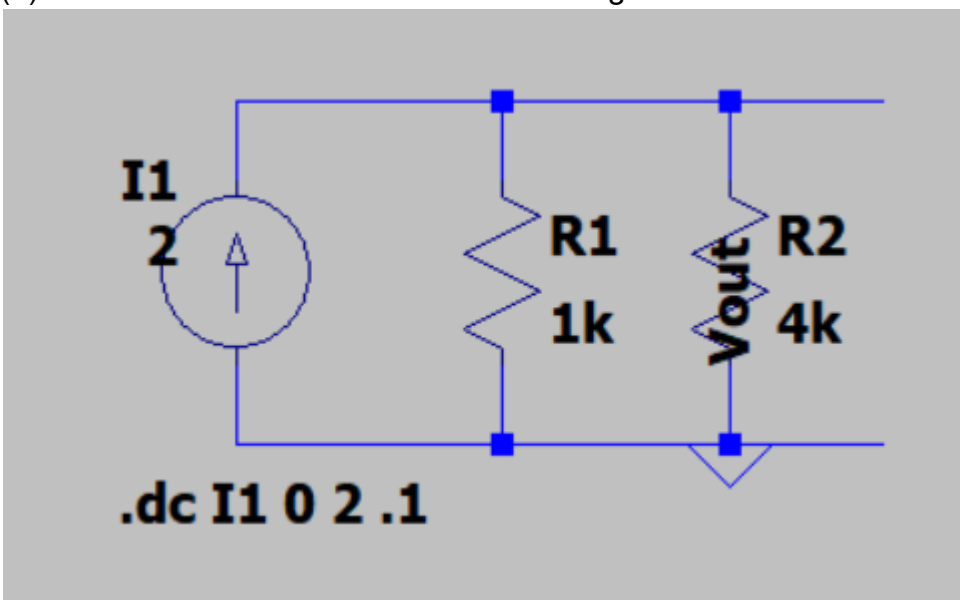

(2) Assign component value for R1 = 1kΩ and R2 = 4kΩ.
(3) Run a DC Sweep simulation on I_{IN} from 0A to 2A in 100mA increments. (4) Plot I_{IN} on the x axis and I_1 and I_2 on the y axis.

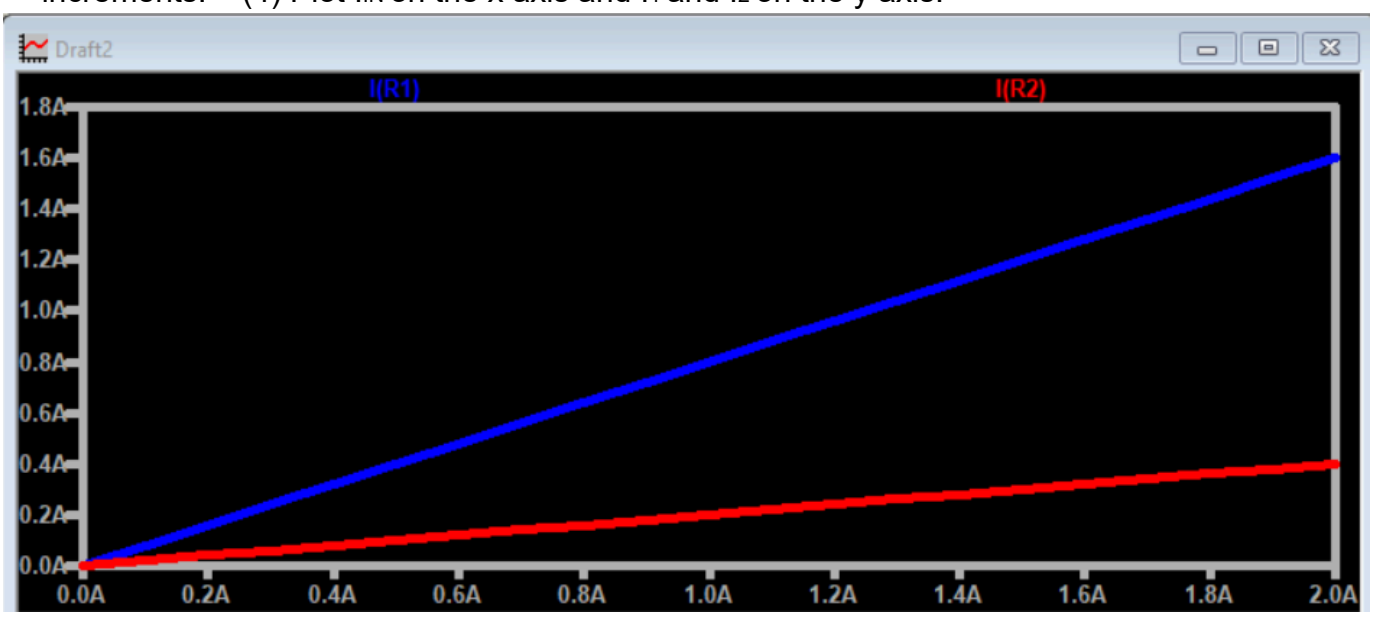

What is the slope of the curves? What does it represent?
Do the results look as expected? Why or why not?
Make sure to take a screen capture of the simulation waveforms.

The slope of the current of R1 is 0.8. It means that the current of R1 increases at a rate of 0.8 amps per every amp the current source increases by.
The slope of the current of R2 is 0.2. It means that the current of R2 increases at a rate of 0.2 amps per every amp the current source increases by.

The results are expected because when you calculate the current of R1 and R2 based on the current of the current source using the current divider equation, the calculations match the simulation. Also, the current measurements of R1 and R2 should add up to the current source, which is also consistent with the simulation.

(5) Plot V_{OUT}.
What is the slope of the curve?
Explain what the slope represents.
Make sure to take a screen capture of the simulation waveforms.

Vout Plot

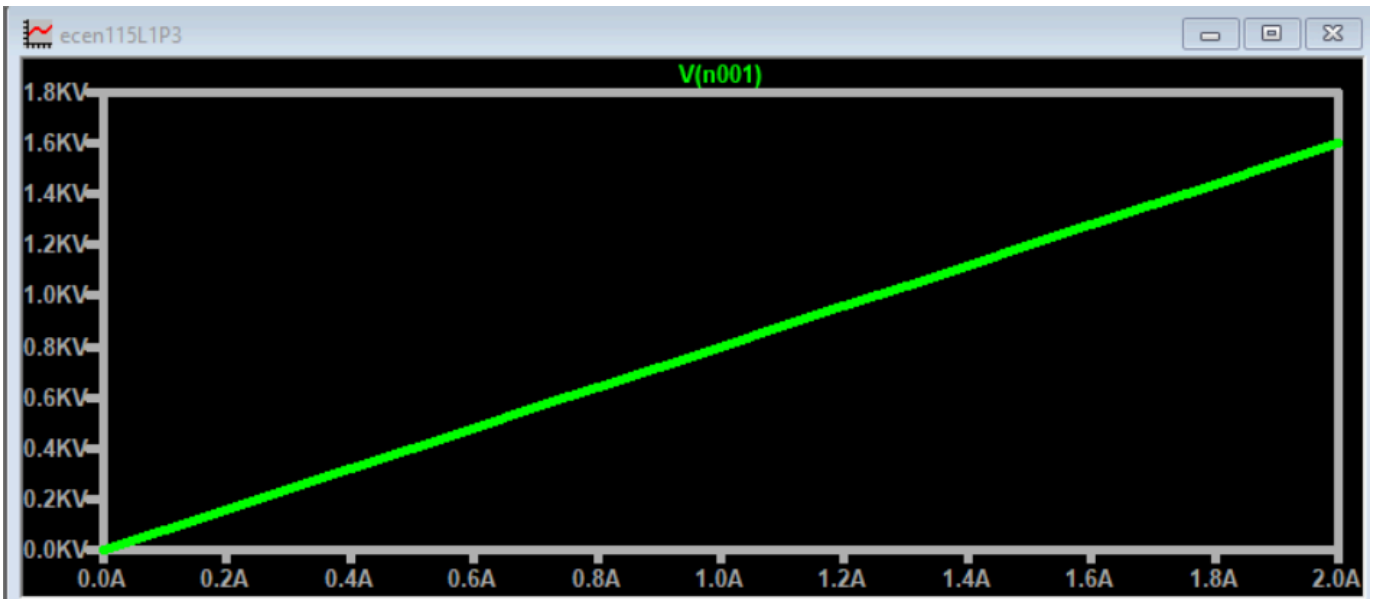

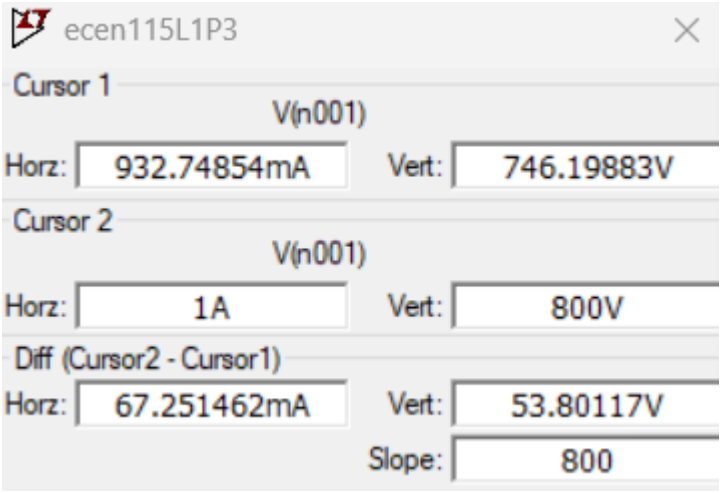

The slope of this curve is 0.8 * 1000= 800. It represents the change in the voltage over R2 everytime the current of the current source increases by 0.1 amp.

TA Check Point: Complete Part 4 and demo the results to your TA.

Part 5: Physical Circuit Build

Use the document “Introduction to Lab Equipment – Part 1” posted on Camino while you do this lab. Build the circuit in Figure 1 with components R1 = 1kΩ and R2 = 4KΩ.

Hook up the resistor network voltage supply to the power supply. Once everything is properly connected, set the voltage to 2Volts. Increase the voltage to the following voltage levels (4V, 6V, 8V and 10V) and note at each point the voltage Vout using the DMM.
Plot Vin vs. Vout and see if it matches your simulation plot.
Vin:2,4,6,8,10
Vout:1.5946 ,3.1936, 4.7929, 6.3841, 7.9825

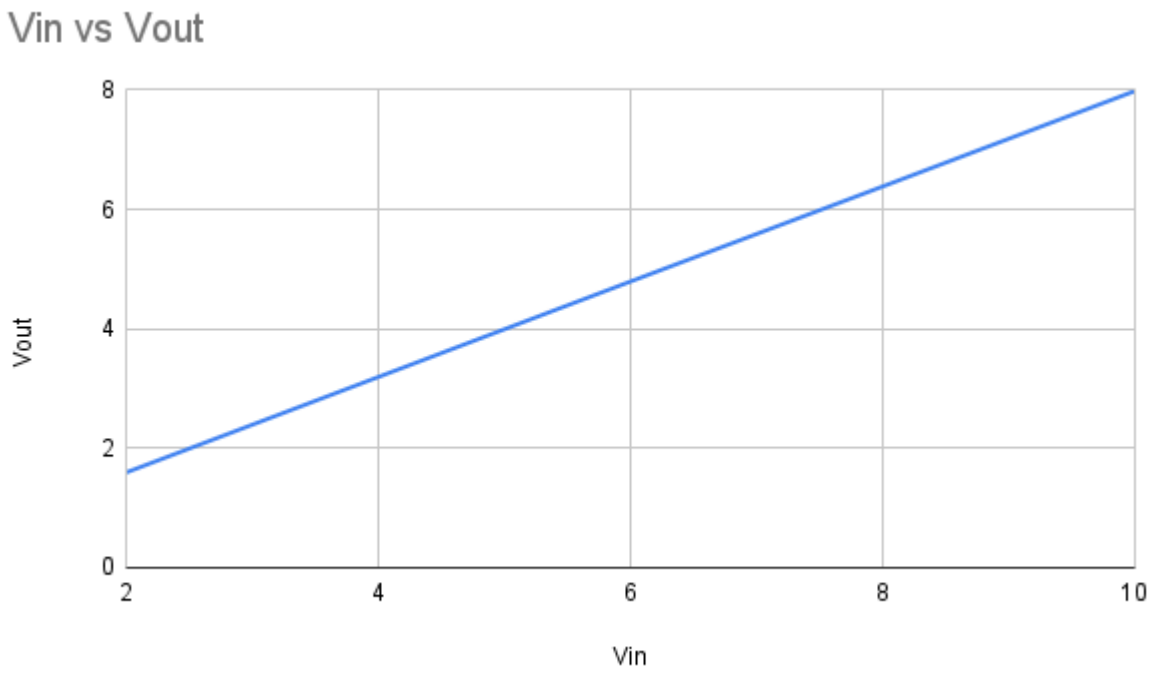

Where do you place the ammeter when measuring the current I_{out} through R2 in Figure 1? Draw a schematic showing the placement.

It shouldn’t matter as the current is the same everywhere, but we’ll say before the ground and after R2. Break the circuit and input the ammeter where the arrow is below.

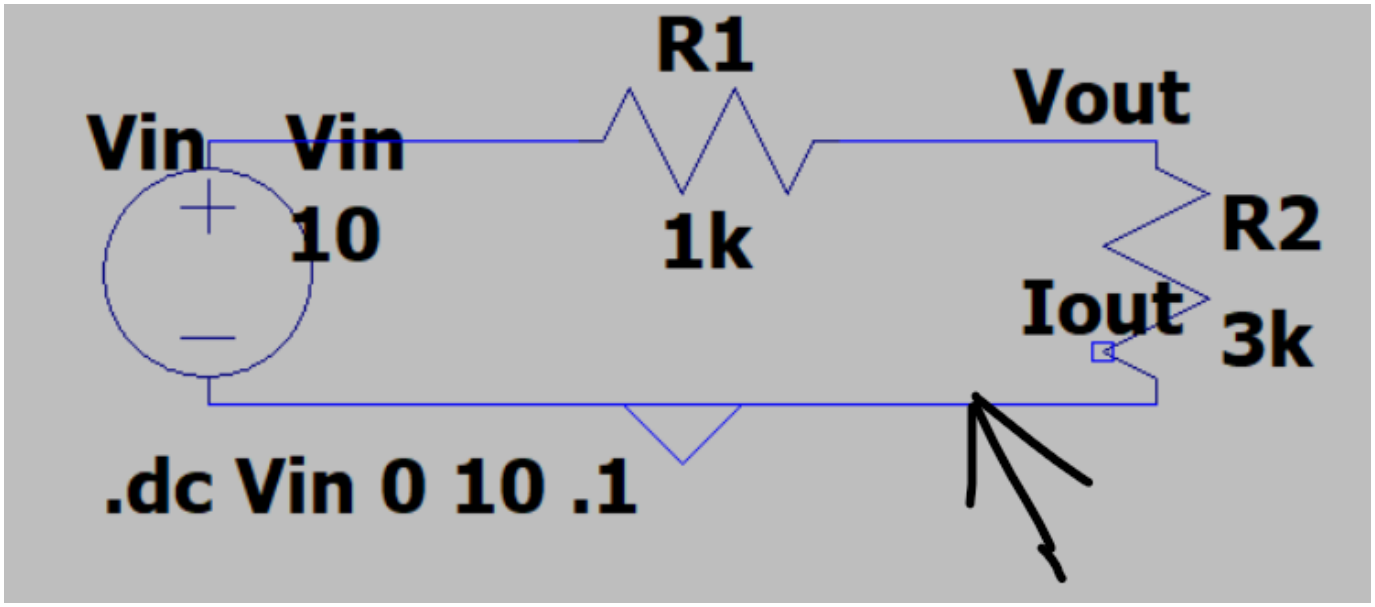

Part 6: Lab extension For lab report)

(1) For Figure 2: V_{IN} is a sinusoidal source with 1V amplitude and 1 kHz frequency. R1 = 1kΩ and R2 =4kΩ.What value would V_{OUT} have if another resistor R3 of 1KΩ is added in parallel to R1 or R2? **Vout (1V amplitude) would be the same because the resistors are in parallel.**

(2) For Figure 2: Where do you place the ammeter when measuring the current I_1 through R1 in Figure 2. Draw a schematic showing the placement. **You would place the ammeter after or before R1 but avoid any nodal separation. See the arrows below. You could place it at either arrow. You would still have to break the circuit when inserting the ammeter though.**

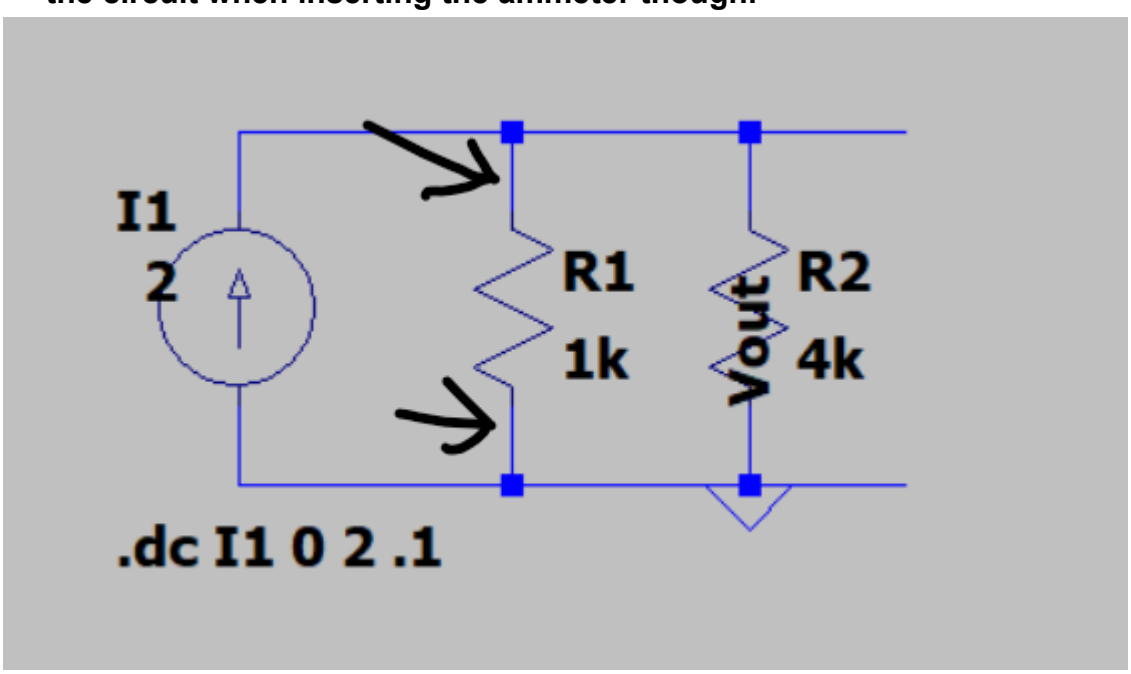

(3) Please include your response to this section in your lab report.

IV. REPORT

Write a laboratory report that details all the work done. Use the lab reporting guidelines published to complete the report.